IRis

Northeastern University

Electrical and Computer Engineering Faculty Publications

Department of Electrical and Computer Engineering

June 15, 1994

Excess current in shunted Josephson weak links

R. G. Seed

C. Vittoria
Northeastern University

A. Widom
Northeastern University

Recommended Citation

Seed, R. G.; Vittoria, C.; and Widom, A., "Excess current in shunted Josephson weak links" (1994). *Electrical and Computer Engineering Faculty Publications.* Paper 45. http://hdl.handle.net/2047/d20002216

This work is available open access, hosted by Northeastern University.

AIP | Journal of Applied Physics

Excess current in shunted Josephson weak links

R. G. Seed, C. Vittoria, and A. Widom

Citation: J. Appl. Phys. **75**, 8195 (1994); doi: 10.1063/1.356519
View online: http://dx.doi.org/10.1063/1.356519
View Table of Contents: http://jap.aip.org/resource/1/JAPIAU/v75/i12
Published by the American Institute of Physics.

Related Articles

Structural and transport characterization of ultra thin Ba0.05Sr0.95TiO3 layers grown over Nb electrodes for the development of Josephson junctions
Appl. Phys. Lett. 100, 012602 (2012)

The morphology of Al-based submicron Josephson junction
J. Appl. Phys. 110, 123903 (2011)

Josephson Hall current in a noncentrosymmetric superconductor/ferromagnet/superconductor junction
J. Appl. Phys. 110, 113717 (2011)

Lateral imaging of the superconducting vortex lattice using Doppler-modulated scanning tunneling microscopy
Appl. Phys. Lett. 99, 192505 (2011)

Spectral characteristics of noisy Josephson flux flow oscillator
J. Appl. Phys. 110, 053922 (2011)

Additional information on J. Appl. Phys.

Journal Homepage: http://jap.aip.org/
Journal Information: http://jap.aip.org/about/about_the_journal
Top downloads: http://jap.aip.org/features/most_downloaded
Information for Authors: http://jap.aip.org/authors

ADVERTISEMENT

Downloaded 30 Jan 2012 to 129.10.105.52. Redistribution subject to AIP license or copyright; see http://jap.aip.org/about/rights_and_permissions

Excess current in shunted Josephson weak links

R. G. Seed and C. Vittoria
Department of Electrical Engineering, Northeastern University, Boston, Massachusetts 02115

A. Widom
Physics Department, Northeastern University, Boston, Massachusetts 02115

(Received 19 November 1993; accepted for publication 19 February 1994)

In a variety of Josephson weak links the resistively shunted junction model does not properly describe observed excess currents in the voltage current characteristics. A modification of the model is proposed which more adequately describes experimental data.

A large variety of superconducting weak links have been found to be of use beyond the insulating layer tunneling junction originally discussed by Josephson. The voltage current characteristics of these devices are often discussed in the context of the resistively shunted junction (RSJ) model. Within this context, the agreement between experimental and theoretical voltage-current characteristics is, in some cases, flawed by the observed excess currents. This is true for older low T_c superconducting point contacts and microbridges,[1–9] as well as more recent high T_c grain boundary and step edge superconducting weak links.[10–16]

Our purpose is to propose a model in which the often observed excess currents are more adequately described. To see what is involved, consider a narrow superconducting wire or a thin film superconductor with no weak link. It is possible to describe the current voltage characteristics of the superconducting sample using a general $v=v(I)$, as shown in Fig. 1(a). If we assume that this superconducting section were placed in parallel with a Josephson weak link, as a shunt shown in Fig. 1(b), then the total current through the circuit would be

$$I=I_{\text{shunt}}+I_c \sin\theta, \tag{1}$$

where I_c is the weak link critical current. The equation of motion for the phase difference across the weak link would then obey

$$-\frac{\hbar}{q}\frac{d\theta}{dt}=v(I_{\text{shunt}})=v(I-I_c\sin\theta), \tag{2}$$

where $q=2e$ is the electron pair charge. Following the results of McCumber[17] and Stewart,[18] the solution for the voltage as a function of current is given by

$$\frac{1}{V(I)}=\int_0^{2\pi}\frac{d\theta}{2\pi}\frac{1}{v(I-I_c\sin\theta)}, \tag{3}$$

where we have made more general the shunt voltage model $v(I)$, i.e., in Eq. (3) we need not use a simple shunt resistor equation $v(I)=\text{RI}$.

For example, if the shunt were a supeconductor rather than a simple resistor one might expect

$$v(I)=0 \quad \text{if} \quad 0<I<I_0, \tag{4a}$$

$$v(I)=R(I-I_0) \quad \text{if} \quad I>I_0. \tag{4b}$$

The voltage current characteristics implied by Eqs. (3) and (4) are plotted in Fig. 2 for several values of $\alpha=(I_0/I_c)$. The current voltage characteristics of the RSJ model correspond to $\alpha=0$. For $\alpha>0$, there is an "excess current" of I_0 for high values of I, and the zero voltage intercept is at I_0+I_c.

For another example, consider the more accurate nonlinear model. In a narrow superconducting wire or thin film superconductor with no weak link, the voltage current characteristics due to thermal vortex ring activation is adequately described by

$$v(I)=RI\exp(-I_0/I). \tag{5}$$

Equation (5) describes the voltage in the resistive mixed state and includes "rounding" in the shunt voltage current characteristics.[19] If such a thin superconducting region were to create a leak or were to "shunt" a Josephson weak link, then the implications of Eqs. (3) and (5) are that

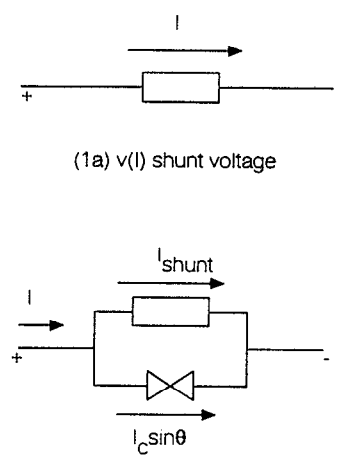

FIG. 1. (a) A linear or nonlinear circuit element with terminal voltage as a function of current. (b) A weak link with a shunting circuit element. The voltage across the two element pair is a function of the current through the shunting element.

 0021-8979/94/75(12)/8195/3/$6.00 © 1994 American Institute of Physics

Downloaded 30 Jan 2012 to 129.10.105.52. Redistribution subject to AIP license or copyright; see http://jap.aip.org/about/rights_and_permissions

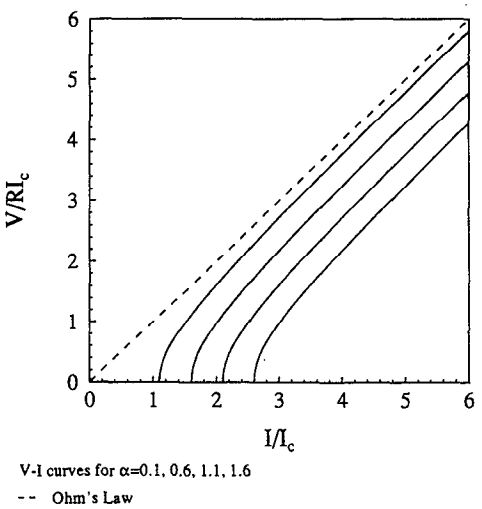

FIG. 2. Voltage-current characteristics of a weak link junction shunted by a circuit element with piecewise linear resistance. For larger values of α, the RSJ-like behavior is shifted away from the origin. The excess current is $I_0=\alpha I_c$ and the zero voltage intercept is I_0+I_c.

$$\frac{1}{V(I)}=\oint\frac{d\theta}{2\pi}\frac{1}{R(I-I_c\sin\theta)\exp[-I_0/(I-I_c\sin\theta)]}, \quad (6)$$

which again differs from the conventional RSJ model for nonzero values of the parameter $\alpha=(I_0/I_c)$. If $\alpha=0$, then $V(I)=R\sqrt{I^2-I_c^2}$ for $(I>I_c)$, which is the standard RSJ model result. If $I\gg I_c$, the RSJ model yields an Ohm's law voltage with no excess critical current. If $\alpha>0$, then an excess current appears which can be computed numerically from Eq. (6). The results are shown in Fig. 3.

Comparison with theory has been demonstrated using weak links of $YBa_2Cu_3O_{7-x}$ (YBCO). The fabrication of YBCO grain boundary weak links involved growing an epitaxial thin film of YBCO on a substrate of bicrystal $SrTiO_3$, which is commercially available. The bicrystal interface induced a grain boundary in the epitaxial film. One effect of the grain boundary was to reduce the critical current in the film across the boundary.[20–23] It was also determined that these regions of suppressed critical current act as dc weak link junctions.[24] Measurements across the junctions were obtained by etching 10–30 μm bridges across the grain boundary, and attaching four-point contacts to the superconductor. In addition to the four-point contacts, microwave signals were launched into the microbridge, and current steps appeared at $V=n(\hbar\omega/2e)$ while the critical current was suppressed, consistent with the theory of ac effects in weak links.[25] It is natural to assume that when these weak link effects were observed, there was still present the normal supercurrent across the boundary. A typical I-V characteristic curve for a YBCO grain boundary weak link is shown in Fig. 4 using this technique.

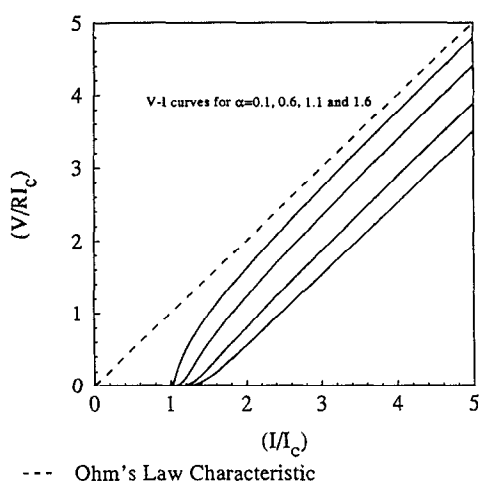

FIG. 3. The voltage-current characteristics of a weak link junction shunted by a circuit element with nonlinear V-I characteristics. The shunting elements V-I characteristics are given by $v(I)=RI\exp I_0/I$, the thermal vortex ring activation model. The asymptotic intercept is approximately I_0, which indicates the excess current.

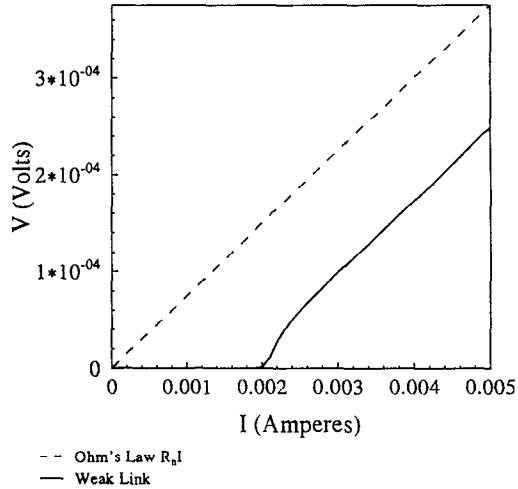

FIG. 4. The V-I characteristic curve of an experimental artificially induced grain boundary microbridge of YBCO at temperature $T=64$ K.

Finally, in the limiting case in Eq. (8), where $I_s\gg I_c$, the V-I characteristic function is dominated by the behavior of the shunting superconductor whose V-I characteristic has the form of a normal superconductor transition.[26]

The authors wish to acknowledge the NSF.

[1] J. E. Zimmerman and A. H. Silver, Phys. Rev. **141**, 367 (1966).
[2] D. A. Weitz, W. J. Skocpol, and M. Tinkham, Phys. Rev. Lett. **40**, 253 (1978).
[3] T. Noguchi, S. Takado, S. Morita, and N. Mikoshiba, Jpn. J. Appl. Phys. **19**, L473 (1980).
[4] E. L. Hu, R. E. Howard, L. D. Jackel, L. A. Fetter, and D. M. Tennant, IEEE Trans. Electron Devices **27**, 2030 (1980).
[5] P. L. Richards, in *Semiconductors and Semimetals*, edited by R. K. Willardson and A. C. Beer (Academic, New York, 1977), Vol. 12, p. 395.
[6] K. Gamo, T. Harada, K. Arimoto, and S. Namba, IEEE Trans. Electron Devices **27**, 2033 (1980).
[7] P. W. Anderson and A. H. Dayem, Phys. Rev. Lett. **13**, 195 (1964).
[8] P. L. Richards and Q. Hu, Proc. IEEE **77**, 1233 (1989).
[9] J. H. Hinken, *Superconductor Electronics Fundamentals and Microwave Applications* (Springer, Berlin, 1989).
[10] P. Seidel, E. Heinz, F. Schmidl, K. Zach, H.-J. Köhler, H. Schneidewind, J. Borck, L. Dörrer, S. Linzen, T. Köhler, M. Manzel, E. Steinbeiss, H.

Downloaded 30 Jan 2012 to 129.10.105.52. Redistribution subject to AIP license or copyright; see http://jap.aip.org/about/rights_and_permissions

Bruchlos, E.-B. Kley, and H.-J. Fuchs, IEEE Trans. Appl. Supercond. **3**, 2353 (1993).
[11] S. G. Hammond, Y. He, C. M. Muirhead, P. Wu, M. S. Colclough, and K. Char, IEEE Trans. Appl. Supercond. **3**, 2319 (1993).
[12] Y. Y. Divin, J. Mygind, N. F. Pederson, and P. Chaudhari, IEEE Trans. Appl. Supercond. **3**, 2337 (1993).
[13] E. Sarnelli, P. Chaudhari, M. Dumling, and J. A. Lacey, IEEE Trans. Appl. Supercond. **3**, 2329 (1993).
[14] H. B. Lu, T. W. Huang, J. J. Wang, J. Lin, S. L. Tu, S. J. Yang, and S. E. Hsu, IEEE Trans. Appl. Supercond. **3** , 2325 (1993).
[15] Q. Y. Ying, C. Hilbert, and H. Kroger, IEEE Trans. Appl. Supercond. **3**, 2277 (1993).
[16] R. P. Robertazzi, R. H. Koch, R. B. Laibowitz, and W. J. Gallagher, IEEE Trans. Appl. Supercond. **3**, 2030 (1993).
[17] D. E. McCumber, J. Appl. Phys. **39**, 3113 (1968).
[18] W. C. Stewart, Appl. Phys. Lett. **12**, 277 (1968).
[19] H. Jiang, A. Widom, Y. Huang, T. Yuan, C. Vittoria, D. B. Chrisey, and J. S. Horwitz, Phys. Rev. B **45**, 3048 (1992).
[20] P. Chaudhari, J. Mannhart, D. Dimos, C. C. Tsuei, J. Chi, M. M. Oprysko, and M. Scheuermann, Phys. Rev. Lett. **60**, 1653 (1988).
[21] D. Dimos, P. Chaudhari, J. Mannhart, and F. K. LeGoues, Phys. Rev. Lett. **61**, 219 (1988).
[22] J. Mannhart, P. Chaudhari, D. Dimos, C. C. Tsuei, and T. R. McGuire, Phys. Rev. Lett. **61**, 2476 (1988).
[23] J. Mannhart, J. Supercond. **3**, 281 (1990).
[24] R. Gross, P. Chaudhari, D. Dimos, A. Gupta, and G. Koren, Phys. Rev. Lett. **64**, 228 (1990).
[25] R. G. Seed, P. C. Dorsey, H. How, A. Widom, and C. Vittoria, IEEE Trans. Magn. **29**, 3568 (1993).
[26] D. R. Tilley and J. Tilley, *Superfluidity and Superconductivity* (Hilger, London, 1986), p. 229.

Downloaded 30 Jan 2012 to 129.10.105.52. Redistribution subject to AIP license or copyright; see http://jap.aip.org/about/rights_and_permissions