IRis

Northeastern University

Electrical and Computer Engineering Faculty Publications

Department of Electrical and Computer Engineering

May 01, 1990

ac Hall measurements on high-Tc superconductors

H. How

C. Vittoria
Northeastern University

A. Widom
Northeastern University

Recommended Citation

How, H.; Vittoria, C.; and Widom, A., "ac Hall measurements on high-Tc superconductors" (1990). *Electrical and Computer Engineering Faculty Publications.* Paper 22. http://hdl.handle.net/2047/d20002192

This work is available open access, hosted by Northeastern University.

AIP Journal of Applied Physics

ac Hall measurements on highTc superconductors

H. How, C. Vittoria, and A. Widom

Citation: J. Appl. Phys. **67**, 4545 (1990); doi: 10.1063/1.344863
View online: http://dx.doi.org/10.1063/1.344863
View Table of Contents: http://jap.aip.org/resource/1/JAPIAU/v67/i9
Published by the American Institute of Physics.

Related Articles

Hysteresis jumps of the surface reactance of a layered superconductor as the incident wave amplitude varies
Low Temp. Phys. 36, 92 (2010)

Characteristics of terahertz radiation emitted from the intrinsic Josephson junctions in high-Tc superconductor Bi2Sr2CaCu2O8+δ
Appl. Phys. Lett. 95, 232511 (2009)

Joule heating and high frequency nonlinear effects in the surface impedance of high Tc superconductors
J. Appl. Phys. 106, 023912 (2009)

Complex microwave conductivity of Pr1.85Ce0.15CuO4−δ thin films using a cavity perturbation method
J. Appl. Phys. 104, 123914 (2008)

Development of a 700MHz low-/high- temperature superconductor nuclear magnetic resonance magnet: Test results and spatial homogeneity improvement
Rev. Sci. Instrum. 79, 026105 (2008)

Additional information on J. Appl. Phys.

Journal Homepage: http://jap.aip.org/
Journal Information: http://jap.aip.org/about/about_the_journal
Top downloads: http://jap.aip.org/features/most_downloaded
Information for Authors: http://jap.aip.org/authors

ADVERTISEMENT

Downloaded 01 Feb 2012 to 129.10.105.52. Redistribution subject to AIP license or copyright; see http://jap.aip.org/about/rights_and_permissions

ac Hall measurements on high-T_c superconductors

H. How and C. Vittoria
Department of Electrical and Computer Engineering, Northeastern University, Boston, Massachusetts 02115

A. Widom
Department of Physics, Northeastern University, Boston, Massachusetts 02115

Hall experiments are carried out normally in bulk materials where a dc current is applied perpendicular to a static magnetic field. Since the dc Hall coefficient is small for type-II superconductors at temperatures well below the transition temperature T_c, the possibility of measuring the Hall coefficient of the superconductor under ac conditions is explored. It is found that the ac Hall coefficient can be readily detected through the measurement of the reflected microwave beam, whose polarization has been rotated 90° away from the incident wave irradiating on the surface of a high-T_c superconducting material biased by a dc magnetic field.

I. INTRODUCTION

Hall experiments are carried out normally in a bulk material where a dc current is applied perpendicular to a static magnetic field. The Hall coefficient is defined by

$$R_H = 1/nec, \tag{1}$$

where n is the number of charge carriers per unit volume, e is the charge per carrier, and c is the speed of light. By measuring the magnitude as well as the sign of R_H one can determine the volume density of the charge carriers as well as whether the dominant charge carrier within the material is a hole or an electron. When the material becomes superconducting, the supercurrent will short-circuit the induced Hall voltage and the Hall effect can be realized only in the flux-flow state of a type-II superconductor. This Hall effect occurs only in the limit of a large transport current where effects of fluxoid pinning become unimportant. Under these conditions normal carriers (electrons or holes) get scattered within the fluxoid core with the observed Hall angle approximately the same as that observed in the normal state.[1,2] For currently discovered high-T_c materials the flux-flow states are not so easy to achieve and the dc Hall effect is very difficult to measure, since this requires very large current density in a magnetic field close to H_{c2} ($\approx$few tens of megaoersted). In this paper we propose to carry out ac Hall-effect measurements where ac currents penetrate near the surface and interact with the magnetic field within the London penetration depth. The ac Hall effect can be rather easily detected because the flux-flow state can be "effectively" established in the ac case.[3] The ac Hall effect implies a 2×2 matrix for the surface impedance under microwave reflection measurements. The diagonal terms of the impedance matrix correspond to the traditional scattering concepts of electromagnetic waves, but the off-diagonal matrix elements are related to polarization rotation of the incident waves irradiating upon the surface of the superconductor. The measured ac Hall coefficient therefore reveals the sign of the charge carriers as well as the Cooper-pair density of the sample in the superconducting state.

It has been found that in the normal state (at temperatures above or slightly below T_c), most (but not all) of the materials used to fabricate the new high-temperature superconductors have holes as the dominant charge carrier. For $La_{2-x}Sr_xCuO_4$ samples the dc Hall coefficients were found proportional to x for $x\leqslant 0.1$, revealing that the substituted Sr ions supply one hole per atom in the above-mentioned Sr concentration range.[4,5] Little temperature variations were found for the dc Hall measurements on the La-Sr-Cu-O samples.[4,5] For a $YBa_2Cu_3O_{7-y}$ sample a positive Hall coefficient was also found,[6] which shows an inverse temperature dependence for temperatures above T_c, indicating that either a temperature-dependent compensation mechanism exists for both holes and electrons or some sort of unusual transport mechanism for holes is taking place within the Y-Ba-Cu-O samples. It then appears reasonable to assume that the charge of the carrier of the supercurrent is $q = 2e$ and will have the same sign (but twice the magnitude) as the carriers in the normal state. However, since the pairing mechanism has not been established yet, it is important to establish experimental evidence in the superconducting state the sign of q, i.e., whether the pair is two electrons or two holes for temperatures well below T_c.

II. THEORY

Consider a type-II superconductor. Let the magnetic field be applied normal to the sample surface with the fluxoids distributed uniformly across the sample ($B\cong H\gg H_{c1}$). A current density of j is applied transverse to the applied field. This is shown in Fig. 1, where the fluxoids are shown as shaded cores. The separation distance between the fluxoids is denoted as d. The magnetic induction within the material is therefore $B = \Phi_0/d^2$. Here Φ_0 is the flux quantum defined by $\Phi_0 = hc/2e$ with h being the Planck constant. The current flowing through the fluxoid region will experience the Lorentz force. This portion of current flowing into a unit volume is defined as $I_1 = j(\xi/d)^2$, where ξ is the coherence length of the Cooper pairs which represents the dimension of the fluxoids. In the above current expression, I_1, the factor

 0021-8979/90/094545-02$03.00 © 1990 American Institute of Physics

Downloaded 01 Feb 2012 to 129.10.105.52. Redistribution subject to AIP license or copyright; see http://jap.aip.org/about/rights_and_permissions

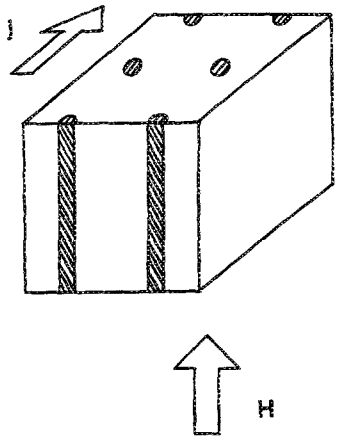

FIG. 1. Hall-effect experimental configuration.

of $(\xi/d)^2$ recognizes the fact that fluxoids are discrete in both the longitudinal direction and the direction transverse to the current. The corresponding magnetic field inside the fluxoids is $B_1 = \Phi_0/\xi^2 = Bd^2/\xi^2$. The Lorentz force density within the fluxoid region is $F_1 = I_1 B_1/c$, where the subscript "one" indicates that all the quantities are active only within the fluxoid. Rewriting the above expression in terms of external quantities, one finds that

$$F_1 = F = jB/c. \tag{2}$$

Therefore, one may view this relation as if the B field was distributed "homogeneously" across the whole sample.

In the following we assume the B field is homogeneously distributed across the sample. The London equation implies that

$$m_s n_s \dot{\mathbf{v}} = n_s q \mathbf{E} + \mathbf{j} \times \mathbf{B}/c, \tag{3}$$

where m_s denotes the mass of the charged pair which travels with velocity $\mathbf{v}$, and n_s denotes the density of the Cooper pairs. Using the relationship $\mathbf{j} = n_s q \mathbf{v}$, assuming the time dependence $\exp(-i\omega t)$, and integrating $\mathbf{j}$ and $\mathbf{E}$ from the surface into the interior of the superconductor, Eq. (3) can be written as

$$\mathbf{E}_s = \frac{-i\omega m_s}{n_s \Lambda q^2}\mathbf{K} - \frac{1}{n_s c q \Lambda}\mathbf{K} \times \mathbf{B}. \tag{4}$$

Here the surface current $\mathbf{K}$ and the surface electric field $\mathbf{E}_s$ are defined by $\int_0^\infty \mathbf{j}\, dl = \mathbf{K}$ and $\int_0^\infty \mathbf{E}\, dl = \mathbf{E}_s \Lambda$, with Λ being the London penetration depth defined by $\Lambda^2 = m_s c^2/(4\pi n_s q^2)$. The surface impedance tensor $\mathbf{Z}$ is defined by $\mathbf{E}_s = \mathbf{Z}\cdot\mathbf{K}$. $\mathbf{B}$ denotes the z direction and $\mathbf{j}$ the x direction. The 2×2 matrix $\mathbf{Z}$ can be obtained from Eq. (4) as

$$Z_{11} = Z_{22} = -i\omega m_s/(n_s \Lambda q^2) \tag{5a}$$

and

$$Z_{12} = -Z_{21} = B/n_s c q \Lambda. \tag{5b}$$

Normal resistivity can be included by simply adding the normal impedance R_n to Z_{11} and Z_{22}. R_n could arise from the normal-electron (hole) scattering of the electromagnetic waves both in the fluxoid regions of the superconducting phase and the regions of nonsuperconducting phases which might coexist with the superconducting phase in a high-T_c sample.

The reflectivity tensor can be expressed as

$$\boldsymbol{\rho} = (\mathbf{Z} - Z_0)/(\mathbf{Z} + Z_0)$$
$$= \frac{1}{(a + r - ib)^2 + d^2} \times \begin{bmatrix} (a - ib)^2 - r^2 + d^2 & 2rd \\ -2rd & (a - ib)^2 - r^2 + d^2 \end{bmatrix}, \tag{6}$$

where $a = R_n$, $b = 4\pi\omega\Lambda/c^2$, $d = B/n_s \Lambda q c$, $r = Z_0$, and Z_0 is the impedance of free space defined as $Z_0 = 4\pi/c$. Normally, we shall have $r \gg a$, $r \gg b$, and $r \gg d$. In this case one obtains

$$\rho_{12} \approx 2d/r = B\Lambda q/m_s c^2. \tag{7}$$

For $B = 5000$ G, $\Lambda = 1\ \mu$m, and q and m_s equal to, respectively, twice the electron charge and mass, the above formula implies $\rho_{12} \approx 3\times 10^{-4}$, which is measurable with a network analyzer (for example, an HP8510B).

ACKNOWLEDGMENT

This work supported by the Office of Naval Research.

[1] W. A. Reed, E. Fawcett, and Y. B. Kim, Phys. Rev. Lett. **14**, 790 (1965).
[2] R. R. Hake, Phys. Rev. **168**, 442 (1968).
[3] W. Hachett, E. Maxwell, and Y. B. Kim, Phys. Lett. A **24**, 663 (1967).
[4] N. P. Ong, Z. Z. Wang, J. Clayhold, J. M. Tarascon, L. H. Greene, and W. R. McKinnon, Phys. Rev. B **35**, 8807 (1987).
[5] M. Suzuki, Phys. Rev. B **39**, 2312 (1989).
[6] P. Chaudhari, R. T. Collins, P. Freitas, R. J. Kirtley, R. H. Koch, R. B. Laibowitz, F. K. LeGoues, T. R. McGuire, T. Penney, Z. Schlesinger, A. P. Segmueller, S. Foner, and E. J. McNiff, Jr., Phys. Rev. B **36**, 8903 (1988).

Downloaded 01 Feb 2012 to 129.10.105.52. Redistribution subject to AIP license or copyright; see http://jap.aip.org/about/rights_and_permissions