IRis

Northeastern University

Electrical and Computer Engineering Faculty Publications

Department of Electrical and Computer Engineering

January 01, 1974

Application of geometric programming to the power systems economic dispatch optimization

Mulukutla S. Sarma
University of Iowa

Charles E. Bayless
Consumers' Power Co., Jackson, Mich.

Eldon K. Stanek
West Virginia University

Recommended Citation

Sarma, Mulukutla S.; Bayless, Charles E.; and Stanek, Eldon K., "Application of geometric programming to the power systems economic dispatch optimization" (1974). *Electrical and Computer Engineering Faculty Publications.* Paper 14. http://hdl.handle.net/2047/d20003717

This work is available open access, hosted by Northeastern University.

APPLICATION OF GEOMETRIC PROGRAMMING TO THE POWER SYSTEM ECONOMIC DISPATCH OPTIMIZATION

Mulukutla S. Sarma
Senior Member
Dept. of Electrical Engineering
The University of Iowa
Iowa City, Iowa 52242

Charles E. Bayless
Member
Consumers' Power Co.
Jackson, Michigan 49201

Eldon K. Stanek
Member
Dept. of Electrical Engineering
West Virginia University
Morgantown, West Virginia 26505

ABSTRACT

This paper presents a new method of obtaining an approximate optimized solution of the economic dispatch problem of a power system using the output of a standard loadflow computer program along with a geometric programming algorithm. This digital-computer method is much faster than the existing methods, requiring only about thirty seconds on an IBM 360-75 system to obtain a loadflow solution as well as optimize the economic dispatch problem for a system of 203 buses, and requires little additional core storage over the requirements of the loadflow routine.

INTRODUCTION

A power system has in general several generating stations and various loads scattered throughout the geographical area it serves, and it has much capital invested in old equipment which is not as efficient as the modern units, so that economic operation can not be achieved simply by locating efficient units near the load centers. Also, the system must of necessity be designed so as to have the generating capacity to meet the peak power demand. With generation and load scattered, there are a great number of combinations of generator outputs which will meet the load requirements at any given time. Only one of these will minimize the cost to the power company. To ascertain which combination minimizes the cost is the optimum economic dispatch problem. However, it may be pointed out here that other criteria such as minimum particulate emissions into the atmosphere may also be considered.

Historically, the economic dispatch problem has been approached from two different points of view. In earlier methods economy was achieved indirectly through calculation and minimization of losses, while in the last decade more rigorous direct methods have been presented which minimize the costs at the generator buses. Thus 'loss formulation' and 'direct cost formulation' have been the two distinctly different approaches for the solution of the economic dispatch problem. An excellent review of the existing methods has been given by Schlegel[1].

Incremental fuel cost is the single most important concept in loading power plants for an optimum solution to the economic dispatch problem. Significant contributions have been made by Kirchmayer[2], Brownlee[3], Cahn[4], Tudor and Lewis[5], Hill and Stevenson[6], and Sze, Calvert and Garnelt[7] using the loss formulation, while minimum cost formulation has been adopted by Squires[8], Carpentier[9], El-Abiad and Jaimes[10], and Sasson[11]. A unified approach to the loadflow, minimum loss, as well as economic dispatch problems using the nonlinear programming techniques appears to be the direction that future solutions of the economic dispatch problem are to take.

With the recent rapid increase in size of power systems due to new generating stations, interconnections, and grid formations, the difficulty of adjusting system loading to obtain optimum economic operation of the system has also increased. Determination of the exact solution to the economic dispatch of a large power system, although theoretically possible, has proven to require a prohibitive amount of time even with the use of a large modern high speed digital computer. Sasson[12] presented a method of optimization which requires over two minutes of computer time on an IBM 7094 for a system of thirty buses, while the method put forth by Ramamoorty and Rao[13] requires four minutes of execution time on an IBM 7044 for a network of five buses.

In the method that is suggested in this paper, the output of any standard loadflow program is used to produce an equivalent circuit of the system under consideration. Based on the principles of geometric programming, a necessary and sufficient condition for the optimum solution of the economic dispatch problem has been developed and applied to the system operating under certain constraints.

GEOMETRIC PROGRAMMING

Geometric programming[14] is a mathematical technique designed to minimize a certain class of functions called posynomials, which are positive polynomials. Briefly, the problem of minimizing is dealt with

by maximizing a related product function. The minimizing problem is called the primal program and the related maximizing problem is termed the dual program.

In a typical engineering design problem the total cost, g, is often given as the sum of the individual component costs, U_i, thus,

$$g = U_1 + U_2 + \ldots + U_n \tag{1}$$

where

$$U_i = C_i \cdot t_1^{a_{i1}} \cdot t_2^{a_{i2}} \ldots t_m^{a_{im}} \tag{2}$$

wherein C_i's are positive constants, the exponents a_{ij} are arbitrary real constants, and $t_1, t_2, \ldots, t_m$ are taken to be positive variables. Subject to these conditions the function g is said to be a posynomial.

One of the distinguishing features of geometric programming is the central role played by the terms U_i in the posynomial g. Instead of trying to ascertain the proper values of the independent variables t_i, geometric programming first determines the minimum of the cost function, g, and the relative contribution of the terms U_i to this cost. Only then does the program determine the values of the parameters t_j necessary to achieve this cost.

The problem of minimizing a posynomial is solved by using the geometric inequality, which states that the arithmetic mean is at least as great as the geometric mean and also, the weighted arithmetic mean is equal to or greater than the corresponding weighted geometric mean. The first step in applying geometric programming to a problem is to select the weights appropriate to the problem under consideration. To show how this is accomplished, the following general geometric inequality may be considered:

$$\delta_1 u_1 + \delta_2 u_2 + \ldots + \delta_n \delta_{u_n} \geq u_1^{\delta_1} u_2^{\delta_2} \cdot \ldots u_n^{\delta_n} \tag{3}$$

where $u_1, u_2, \ldots, u_n$ are arbitrary non-negative numbers and $\delta_1, \delta_2, \ldots, \delta_n$ are arbitrary positive weights that satisfy the normality condition given below:

$$\delta_1 + \delta_2 + \ldots + \delta_n = 1 \tag{4}$$

By letting

$$U_1 = \delta_1 u_1,\ U_2 = \delta_2 u_2,\ \ldots,\ U_n = \delta_n u_n \tag{5}$$

Eq. (3) becomes:

$$U_1 + U_2 + \ldots + U_n \geq \left(\frac{U_1}{\delta_1}\right)^{\delta_1}\left(\frac{U_2}{\delta_2}\right)^{\delta_2} \ldots \left(\frac{U_n}{\delta_n}\right)^{\delta_n} \tag{6}$$

The left side of this geometric inequality is called the primal function g, and the right-hand side is termed the pre-dual function V. Thus Eq. (6) can be written as:

$$g \geq V \tag{7}$$

The terms U_i given by Eq. (2) may now be substituted into Eq. (6) to obtain the pre-dual function in the form:

$$V(\delta,t) = \left(\frac{C_1}{\delta_1}\right)^{\delta_1}\left(\frac{C_2}{\delta_2}\right)^{\delta_2} \ldots \left(\frac{C_n}{\delta_n}\right)^{\delta_n} t_1^{D_1}\, t_2^{D_2} \ldots t_m^{D_m} \tag{8}$$

where the exponents D_j are the linear combinations of the exponents U_i:

$$D_j = \sum_{i=1}^{n} \delta_i a_{ij}, \quad j = 1, 2, \ldots, m \tag{9}$$

Through a proper choice of the weights δ_i, the exponents D_j can be eliminated and thereby the pre-dual function can be made independent of the variable t_j, in which case it is termed as the dual function.

$$V(\delta) = \left(\frac{C_1}{\delta_1}\right)^{\delta_1}\left(\frac{C_2}{\delta_2}\right)^{\delta_2} \ldots \left(\frac{C_n}{\delta_n}\right)^{\delta_n} \tag{10}$$

This choice of weights to eliminate the exponents is designated as the orthogonality condition. From Eq. (7) it is obvious that g has a positive greatest lower bound M. Thus:

$$g(t) \geq M \geq V(\delta) \tag{11}$$

Where M is an upper bound for the dual function $V(\delta)$, for any choice of weights δ_i that cause the exponents to vanish. In fact it can be shown that the maximum of the dual function is equal to the minimum of the primal function.

The ability of geometric programming to handle constrained minima raises it from the status of a novelty to a valuable engineering tool. It can be shown that the effect of the constraints would be to add one term for each additional term in the constraint. Geometric programming gives the minimum value of g(t) without determining the point $(t_1, t_2, \ldots, t_n)$ at which this minimum occurs. It can be shown that

$$\frac{U_i(t')}{\delta_i'} = g(t') = V(\delta') \tag{12}$$

or

$$U_i(t') = \delta_i' V(\delta') \tag{13}$$

where δ_i's satisfy the normality condition. Then each term $U_i(t')$ may be found and from this the value of the independent variables t_j' may be found.

In the sections that follow, the economic dispatch problem will be formulated in a manner in which it is possible to express it as a posynomial with constraints and in which geometric programming can be applied to its solution.

FORMULATION OF THE PROBLEM

First it is necessary to inquire into the nature of the cost to be minimized. In a power system, basically two types of cost occur, fixed and variable. Fixed costs are generally those costs associated with equipment costs, such as transmission lines, generating stations, transformers, etc. and are not considered here. The variable cost taken into account is the fuel cost per unit of the electrical power given by:

$$\text{Fuel cost/MW} = \frac{(\$/\text{lb})(\text{BTU/MW})}{(\text{BTU/lb})} = (\$/\text{MW}) \qquad (14)$$

where ($/lb) is the cost of the fuel such as coal, oil, etc., (BTU/MW) is the conversion factor between thermal and electrical energy, and (BTU/lb) is the heat content of the fuel.

The fuel cost varies from plant to plant depending upon the station design and in fact even varies inside any given plant. Newer stations have better insulation, feed water heaters, etc. that help keep the efficiency high and lower the fuel cost. Typical graphs of fuel cost versus power output of generating units are available in literature. The incremental fuel cost in dollars per megawatt-hour is given by $\left(\frac{dF_n}{dP_n}\right)$ where F_n is the input to unit 'n' and P_n is the power output of the unit. Typical incremental fuel cost curves are also available in literature.

It can be shown that the optimum solution to the economic dispatch problem associated with a system with no line or transformer losses is that all stations should be loaded such that their incremental fuel costs are equal. Unfortunately, actual physical systems seldom lend themselves to such a simple analysis and power systems are no exception as they do contain both line and transformer losses besides some others. Any method of solution for the practical economic dispatch problem must account for all the losses as far as possible.

Geometric programming requires one additional equation for each additional cost term in the primal function; thus each line and transformer adds an equation to the solution matrix. It is desirable to minimize the number of terms in the primal function in order to save computer time and core storage. One method of minimizing the number of terms is to derive an equivalent circuit of the form shown in Figure 1 for the power system.

In the equivalent circuit each generator sees an impedance of $(Z_{loss} + Z_{load})$ equal to the actual impedance seen by the generating unit at any given system configuration of loads and voltages. As these impedances vary with system configuration, the first step in determining the values of the impedances is to perform a loadflow study.

Loadflow Study: For purposes of this paper, the type of loadflow program[15] used is immaterial; only the voltage at each bus is needed as input to the optimization routine and hence any loadflow program which calculates these voltages will suffice. A brief description of the loadflow study used in this work is included hereunder.

To start with, the bus data, line data, and transformer data are read in. Then the self-impedance of each node is calculated, and the line as well as transformer impedances are placed in a complex matrix. The loadflow program will automatically assign a voltage of (1.0 + j0.0) per unit to each bus except the swing bus, and assign the maximum generated power to each generator unless other values are read in. At this stage the plant incremental fuel cost is also read in for each plant. Line and transformer losses are automatically assigned to their terminal buses, and their generation is picked up by each of the generators throughout the system in proportion to its percentage of total real power generation.

The voltage at each bus is then calculated according to the following:

$$V_\ell = \frac{1}{Y_{\ell\ell}}\left(\frac{P_\ell - jQ_\ell}{V_\ell^*} - \sum_{n=1}^{N} Y_{\ell n} V_n\right) \quad n \neq \ell \qquad (15)$$

where ℓ is the bus under consideration, N is the number of buses, P_ℓ is the real power at bus ℓ, Q_ℓ is the reactive power at bus ℓ, $Y_{\ell\ell}$ is the self admittance of bus ℓ, V_ℓ is the bus voltage, and * indicates complex conjugate. Two iterations per bus are performed and an acceleration factor is then applied to decrease the number of iterations needed for convergence.

A generator bus is checked from a different point of view since the real power must be held constant. However, the reactive power should be allowed to change so as to keep the voltage magnitude constant. From Eq. (15) it can easily be seen that

$$Q_\ell = -\text{Imaginary part of } \left[\left(Y_{\ell\ell}V_\ell + \sum_{n=1}^{N} Y_{\ell n}V_n\right)V_\ell^*\right] n \neq \ell \qquad (16)$$

This value of Q_ℓ is substituted into Eq. (15) and a new value of bus voltage is computed, unless the value of Q_ℓ is beyond the maximum set for the generator in which case the maximum value itself is substituted into the expression. The voltage is then multiplied by the ratio of the magnitude of the scheduled voltage to the magnitude of the computed voltage so as to set the proper magnitude. Next the percentage change in voltage is computed for each bus, and if this percentage is greater than a specified precision index, another iteration is performed.

The information supplied by the loadflow study will now be used to derive an algorithm based on geometric programming to solve the economic dispatch problem.

DEVELOPMENT OF A CONDITION BY GEOMETRIC PROGRAMMING CONSIDERATIONS

It is not necessary to use directly the quantities Z_{loss_i} or Z_{load_i} to compute the amount of power to be generated to supply a given load. Instead, losses are calculated using voltages from the load-flow study and system impedances. Representing the ith plant incremental fuel cost by a linear expression of the form $(a_i + b_i p_i)$ where a_i and b_i are some positive constants depending upon the station design, and denoting

$$\left(1 + \frac{P_{loss_i}}{P_{load_i}}\right) = c_i \tag{17}$$

it can be shown that the total cost of generation in the system is given by

$$\text{COST} = \sum_{i=1}^{N} a_i c_i P_i + \frac{1}{2} b_i c_i P_i^2 \tag{18}$$

The constraint for the geometric program must be of the form

$$\frac{\text{Generated Power}}{\text{Maximum Generation Capability}} \leq 1 \tag{19}$$

which assures that no plant will be assigned a generation greater than its capability. Instead of setting a separate constraint for each plant the procedure may be simplified by specifying the constraint equation as follows:

$$\frac{P_i}{C} \leq 1, \qquad i = 1, 2, \ldots, N \tag{20}$$

where C is the generation capability of the largest plant in the system. Although this condition may imply to let a generator be assigned more than its maximum, another part of the computer program is made to check the assigned value of generation, compare it with the maximum, and make a proper correction.

Equations (18) and (20) yield the geometric program[14] given below:

$$\begin{aligned}
\delta_1 + 2\delta_2 \qquad\qquad\qquad\qquad + \delta_{2n+1} &= 0 \\
\delta_3 + 2\delta_4 \qquad\qquad\qquad + \delta_{2n+2} &= 0 \\
\cdots\cdots \\
\delta_{2n-1} + 2\delta_{2n} + \delta_{2n+n} &= 0 \\
\delta_1 + \delta_2 + \delta_3 + \delta_4 + \ldots + \ldots + \delta_{2n-1} + \delta_{2n} &= 1
\end{aligned} \tag{21}$$

where the δ's are arbitrary positive weights.

The solution of the above set of equations can be alleviated and the condition for optimum solution of the economic dispatch problem can be developed on further observing the following. From consideration of Eq. (12) and details given in Ref. 14, one can write:

$$\delta_{2n+1}\, V(\delta) = \frac{P_1}{C}\ ; \quad \delta_{2n+2}\, V(\delta) = \frac{P_2}{C}\ ; \ \ldots$$

$$\delta_{2n+n}\, V(\delta) = \frac{P_N}{C} \tag{22}$$

and

$$\delta_1\, V(\delta) = a_1 c_1 P_1\ ; \quad 2\delta_2\, V(\delta) = b_1 c_1 P_1^2$$

[illegible] (23)

$$\delta_3\, V(\delta) = a_2 c_2 P_2\ ; \quad 2\delta_4\, V(\delta) = b_2 c_2 P_2^2$$

and so on ...

Since $\delta_1 + 2\delta_2 = -\delta_{2n+1}$; $\delta_3 + 2\delta_4 = -\delta_{2n+2}$ (24)

and so on, it follows that

$$a_1 c_1 P_1 + b_1 c_1 P_1^2 = -\frac{P_1}{C}$$

or

$$a_1 c_1 + b_1 c_1 P_1 = -\frac{1}{C}$$

and similarly $a_2 c_2 + b_2 c_2 P_2 = -\frac{1}{C}$

and so on ...

It is thus seen that the following condition must hold good for the optimum solution of the economic dispatch problem:

$$a_1 c_1 + b_1 c_1 P_1 = a_2 c_2 + b_2 c_2 P_2 = a_N c_N + b_N c_N P_N \tag{25}$$

It may be pointed out here that the above condition reduces to the case of no losses if all c_i's are unity, in which case the incremental fuel costs are equal, as is well known. Now Eq. (25) simply states that the product of the incremental fuel costs and corresponding penalty factor must be equal for all the stations.

APPLICATION TO AN ACTUAL POWER SYSTEM

The method that has been developed here is applied to the Monongahela Power System consisting of 203 buses. The data and parameters related to the buses, lines and transformers supplied by the Monongahela Power Company have been used. However the values of incremental fuel cost that have been incorporated in the computer-program are not the actual ones and represent typical values.

Computation of Line and Transformer Losses

The losses associated with the lines as well as transformers are first calculated by use of the formula

$$\text{Loss} = \frac{(\text{Voltage Drop})^2}{\text{Impedance}} \tag{26}$$

which is applied to each of the lines and transformers in the system. The losses of each line

ISA Manuscript Paper Form 53-20

77% Copy 7 x 5 Print Surface For 8-1/2 x 11 Page

terminating on a generator are assigned to that generator itself. In case a line connects one generator to another, the losses of the line are split between the two in proportion to their real power generation. The losses of any lines terminating on such a transformer are assigned to that generator itself. The above mentioned losses are termed as 'first line losses.'

After calculating the total system loss and assigning the first line losses to their respective stations, the remaining losses are allocated in proportion to the station's percentage of system real power generation. The penalty factor for each of the stations is calculated with the use of Eq. (17) given here again for convenience:

$$c_i = \left(1 + \frac{P_{loss_i}}{P_{load_i}}\right) \qquad (17)$$

Calculation of Incremental Fuel Cost Times Penalty Factor

The product of the incremental fuel cost and corresponding penalty factor is calculated for each of the generating plants in the system. The average of this quantity is then computed and the value corresponding to each generating station is checked against this average to see if they are equal. In case they are found to be unequal, correct power to make them equal will be calculated subject to the condition that no plant can be assigned a power greater than its maximum specified earlier. It may be pointed out here that the value of the product of incremental fuel cost and the penalty factor need not be checked for any plant which is running at its prescribed maximum power or very close to it. This is to preclude small plants which may have to run at many times their maximum output to have an equal incremental cost times penalty factor as the big plants, from pulling the average down erroneously.

Computation of Correct Power

The total generated power is summed up, compared with the total load loss, and the mismatch between the two is computed. This difference is then divided by the number of generators available for obtaining an average increase or decrease in load. Such a calculated value represents the amount of power which would have to be added or subtracted from each generator to bring the mismatch to zero and at the same time maintain the incremental cost times penalty factor equal, provided the derivative of the incremental fuel cost with respect to the power (i.e. the slope of the incremental fuel cost curve) is the same for each of the plants. However in practice plants have different slopes. To take care of this factor adequately, power is now added to each station according to the formula:

$$\text{Power added} = \text{Share of Mismatch} \times \frac{\text{Average slope}}{\text{Actual slope}} \qquad (27)$$

where the average slope is the average of all the slopes of incremental fuel cost curves corresponding to the various generating stations.

After the power is computed and corrected accordingly, the product of the incremental cost and penalty factor is checked again and if it is not within a certain prescribed tolerance, another iteration is performed. Later the mismatch between the generated power and load plus loss is checked again to be within prefixed tolerance limits to make sure whether the system is generating the correct amount of power. If it is not satisfactory, another iteration of the optimization routine is performed. Even after the above mentioned criteria are satisfied, two more checks are further made. The voltage at every bus in the system is checked and the generated power at each generator bus is compared with that of the previous loadflow iteration. If these are sufficiently close to the previous values, the final output is printed. If either one is not within satisfactory limits, another iteration of loadflow along with a subsequent iteration of the optimization routine is performed.

Flow Chart and Digital Computer Program

The flow chart as well as the detailed digital computer program written in Fortran IV language along with all the relevant data are included in Ref. 16 and can be made available on request. The iterative procedure consisting of loadflow routine and optimization routine for the economic dispatch is applied to a system of 203 buses and the computer program required only about thirty seconds on an IBM 360-75 system, even starting with an unfavorable initial solution. Also, the core storage additionally required for the optimization routine is nominal. In actual practice the computer time would even be less as each run would have the preceding run as a starting point, which would help decrease the time for convergence.

CONCLUDING REMARKS

A simple and fast procedure for obtaining an approximate optimized solution of the economic dispatch problem of a practical power system is put forth in this paper. The main attributes of the method are its speed and the advantage that it can easily be extended to be used with the currently available computer programs for loadflow studies, without any considerable strain on the core storage requirements. Although the solution is approximate, it is considered to be good enough for practical engineering purposes. Realistic power systems of existing sizes can easily be analyzed and needful corrections can often be done, thereby resulting in optimum economic operation of the entire system. If an exact answer to the economic dispatch problem is desired, the presented method will give a good starting point, close to the actual answer.

ACKNOWLEDGMENTS

The authors would like to express their sincere thanks to the West Virginia University Engineering Experiment Station for providing financial aid in the form of a research assistantship; to Dr. W. W. Cannon, Chairman of the Department of Electrical Engineering of the West Virginia University, for his continued interest and encouragement; to Dr. W. Muth, Director of the West Virginia University Computer Center, for the computing facilities

ISA Manuscript Paper Form 53-25

7 x 9 Print Surface For 8-1/2 x 11 Page

provided; and to the Monogahela Power Company for providing the data and allowing us the use of their system parameters.

The contents of this paper are a part of the Master's thesis[16] submitted to the faculty of the graduate school of the West Virginia University in partial fulfillment of the requirements for the degree of M.S. in Electrical Engineering.

REFERENCES

(1) Schlegal, D. M., "Solutions of the Economic Dispatch Problem," Term Report for EE 842 of the Ohio State University, Dec. 1970.

(2) Kirchmayer, L. K., Economic Operation of Power Systems, John Wiley and Sons, Inc., New York, 1958.

(3) Brownlee, W. R., Coordination of Incremental Fuel Costs and Incremental Transmission Losses by Function of Voltage Phase Angles," AIEE Trans. Pt. IIIA, PA and S, Vol. 73, June 1954, pp. 529-541.

(4) Cahn, C. R., "The Determination of Incremental and Total Loss Formulas from Functions of Voltage Phase Angles," AIEE Trans. Pt. III, PA and S, Vol. 74, April 1955, pp. 161-176.

(5) Tudor, J. R. and Lewis, W. A., "Transmission Losses and Economy Loading by the Use of Admittance Constants," IEEE Trans. on PA and S, Vol. 87, June 1968, pp. 1419-1425.

(6) Hill, E. F., and Stevenson, W. D., Jr., "A New Method of Determining Loss Coefficients," IEEE Trans. on PA and S, Vol. 87, July 1968, pp. 1548-1553.

(7) Sze, T. W., Garnelt, J. R. and Calvort, J. F., "Some Applications of a New Approach to Loss Minimization in Electrical Utility Systems," AIEE Trans. on PA and S, Pt. III, Vol. 77, 1958, pp. 1577-1585.

(8) Squires, R. B., "Economic Dispatch of Generation Directly from Power System Voltage and Admittances," AIEE Trans. on PA and S, Vol. 79, 1960, pp. 1235-1245.

(9) Carpentier, J., "Contribution to the Economic Dispatch Problem," Bull. Soc. Franc. Electricians, Vol. 8, August 1962, pp. 431-447.

(10) El-Abiad, A. H. and Jaimes, F. J., "A Method for Optimum Scheduling of Power Voltage and Magnitude," IEEE Trans. on PA and S, Vol. 88, April 1969, pp. 413-442.

(11) Sasson, A. M., "Nonlinear Programming Solutions for Load-Flow, Minimum Loss, and Economic Dispatching Problems," IEEE Trans. on PA and S, Vol. 88, April 1969, pp. 399-409.

(12) Sasson, A. M., "Combined Use of the Powell and Fletcher Powell Methods for Optimal Load Flows," IEEE Trans. on PA and S, Oct. 1969, pp. 1530-1537.

(13) Ramamoorty, M. and Gopala Rao, J., "Economic Load Scheduling of Thermal Power Systems Using the Penalty Function Approach," IEEE Trans. on PA and S, Nov./Dec. 1970, pp. 2075-2078.

(14) Duffin, R. J., Peterson, E. L. and Zener, C., Geometric Programming, John Wiley and Sons, Inc., New York, 1967.

(15) Stagg, G. W. and El-Abiad, A. H., Computer Methods in Power Systems Analysis, McGraw-Hill, New York, 1968.

(16) Bayless, C. E., "Economic Dispatch Optimization Using Geometric Programming," Master's Thesis, West Virginia University, 1971.

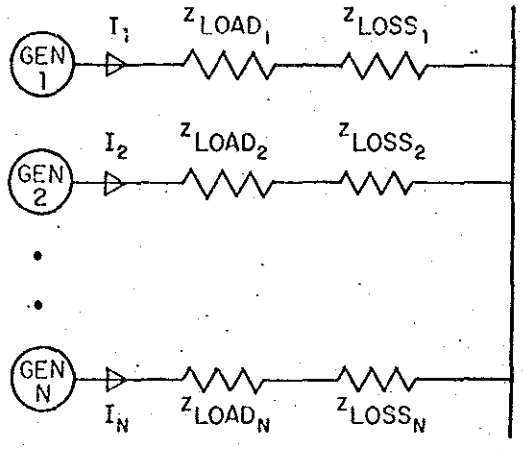

FIGURE 1. AN APPROXIMATE SIMPLIFIED EQUIVALENT CIRCUIT OF A POWER SYSTEM